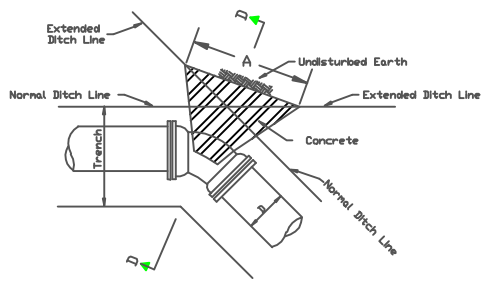

45°, 22-1/2°, 11-1/4° BENDS

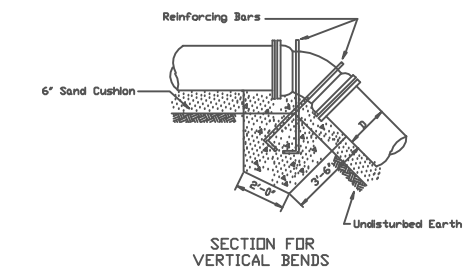

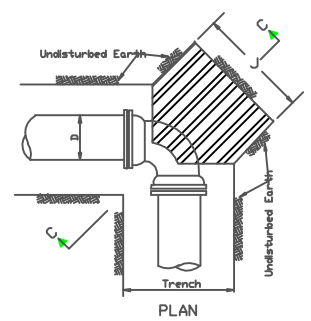

90° BENDS

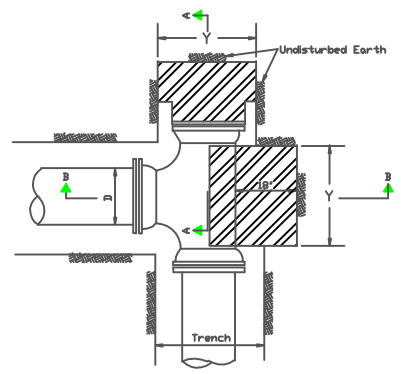

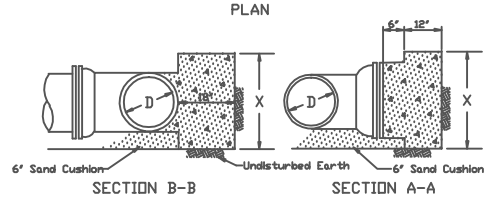

TEES

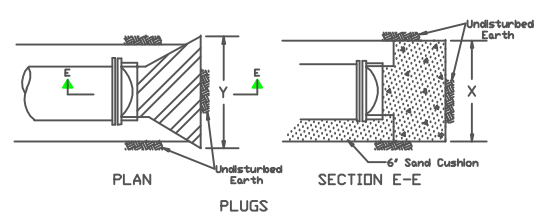

PLUGS

DIMENSIONS FOR CONCRETE THRUST BLOCKS													
Pipe Dia.	Trench Width	45° Bend			22-1/2° Bend			11-1/4° Bend			90° Bend, Tee or Plug		
		A	B	C	A	B	C	A	B	C	X	Y	J
12	28	2'-0"	1'-6"	1'-4"	2'-0"	1'-6"	1'-0"	2'-0"	1'-6"	11"	1'-0"	2'-0"	3'-0"
10	24	2'-0"	1'-4"	1'-4"	2'-0"	1'-4"	1'-0"	1'-10"	1'-4"	11"	1'-0"	1'-0"	2'-8"
8	22	2'-0"	1'-2"	1'-4"	1'-10"	1'-2"	1'-0"	1'-8"	1'-2"	11"	10"	1'-6"	2'-4"
6	20	2'-0"	1'-1"	1'-4"	1'-8"	1'-1"	1'-0"	1'-6"	1'-1"	11"	8"	1'-4"	2'-1"

CONCRETE THRUST BLOCKS SHALL BE CAST IN PLACE CONCRETE WITH 3,500 PSI COMPRESSIVE STRENGTH AT 3 DAYS.

PLACE MINIMUM 8 MIL VISQUEEN BETWEEN THRUST BLOCK AND PIPE OR FITTING

CONCRETE THRUST BLOCK DETAILS

TRENCH DETAILS

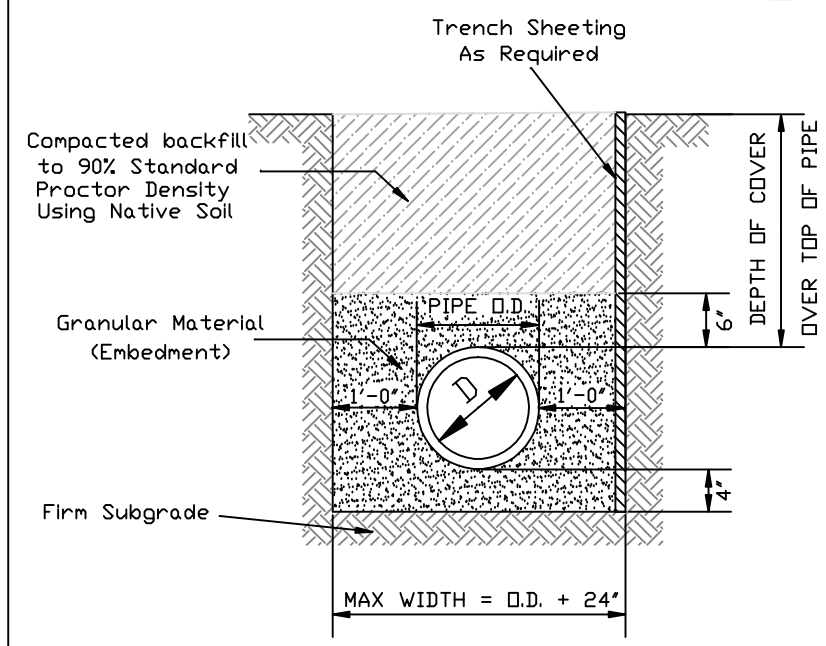

PVC PIPE TYPICAL

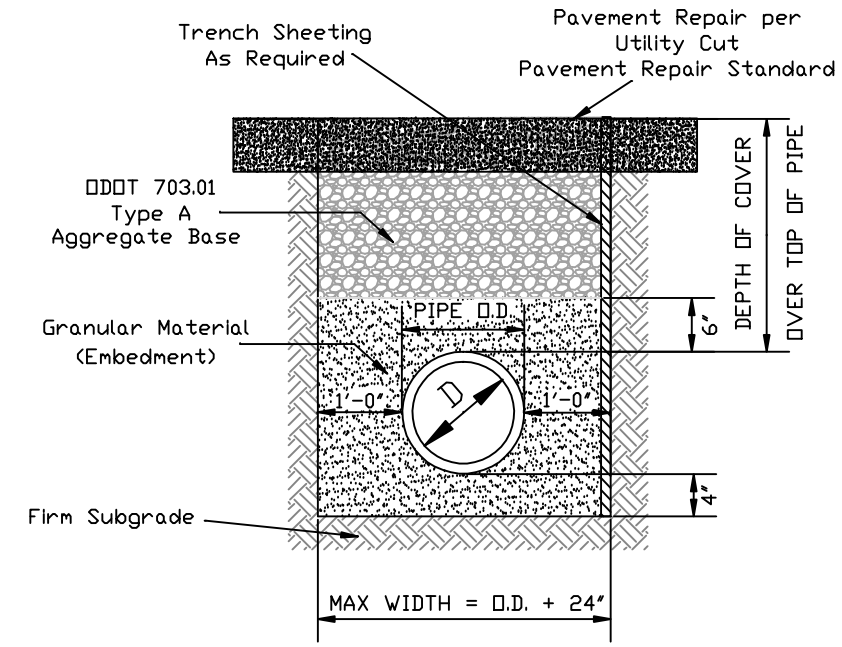

PVC PIPE UNDER DRIVES, STREETS AND ALLEYS

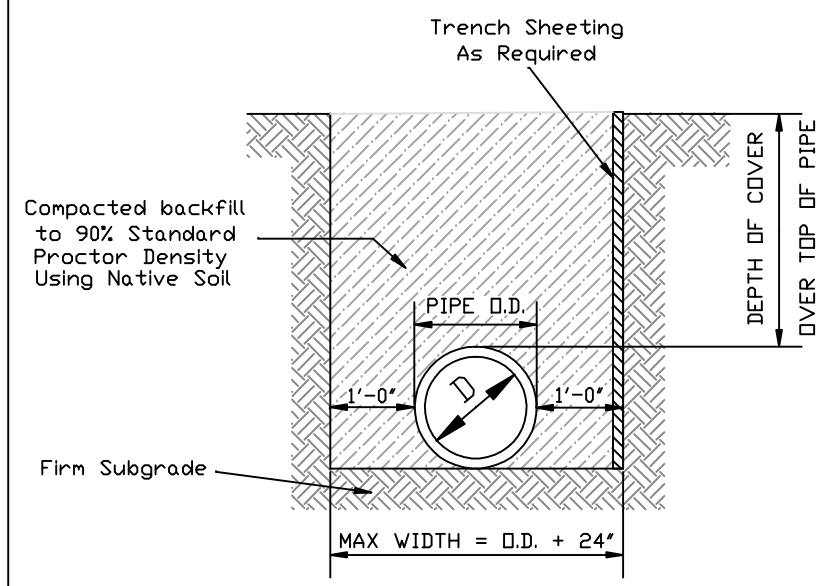

DUCTILE IRON PIPE TYPICAL

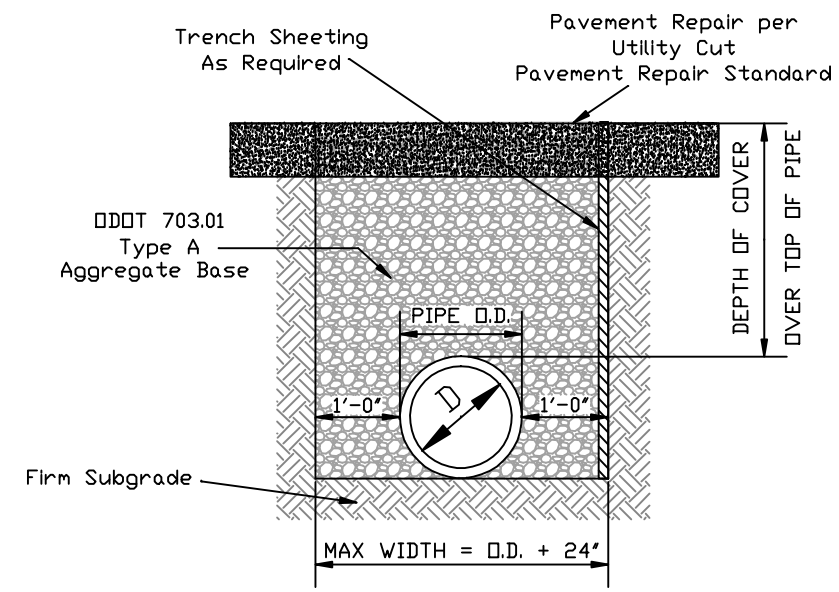

DUCTILE IRON PIPE UNDER DRIVES, STREETS AND ALLEYS

TRENCH WIDTHS		
NOMINAL PIPE DIAMETER (INCHES)	MINIMUM TRENCH WIDTH (INCHES)	MAXIMUM TRENCH WIDTH (INCHES)
6	20	31
8	22	36
10	24	38
12	28	40

NOT TO SCALE

Design	RSV	
Drawn	RSV	
Checked		
Approved		
Squad		

CITY OF DUNCAN

WATER MAIN STANDARD DETAILS

WM-1

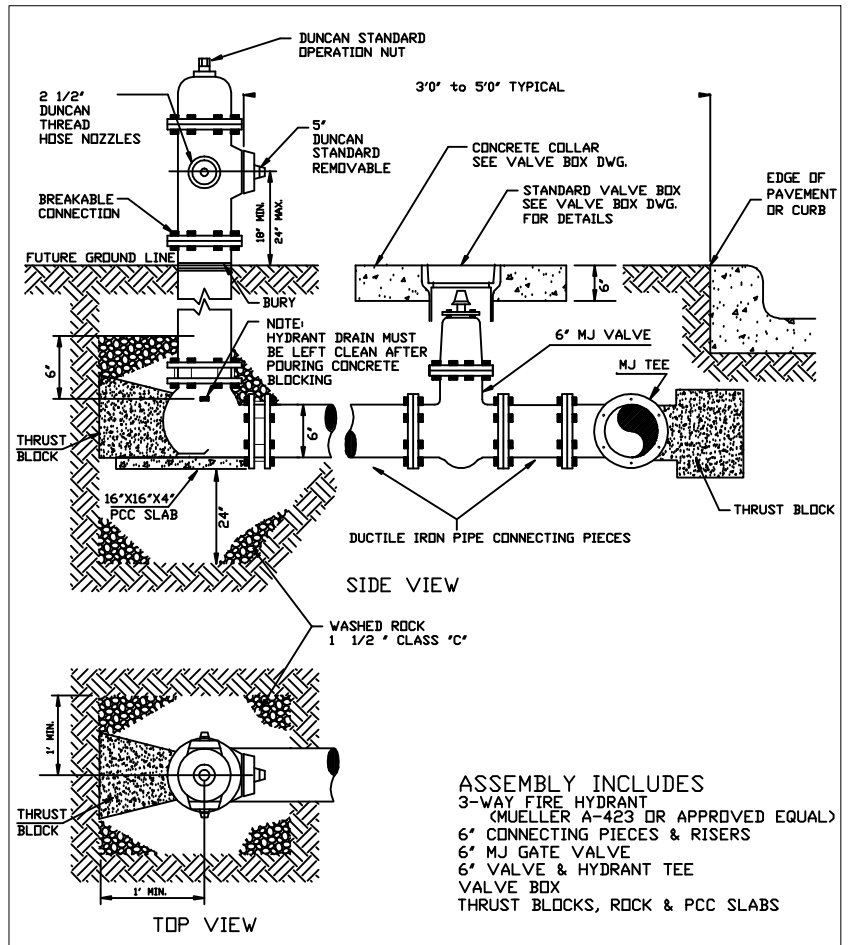

FIRE HYDRANT ASSEMBLY

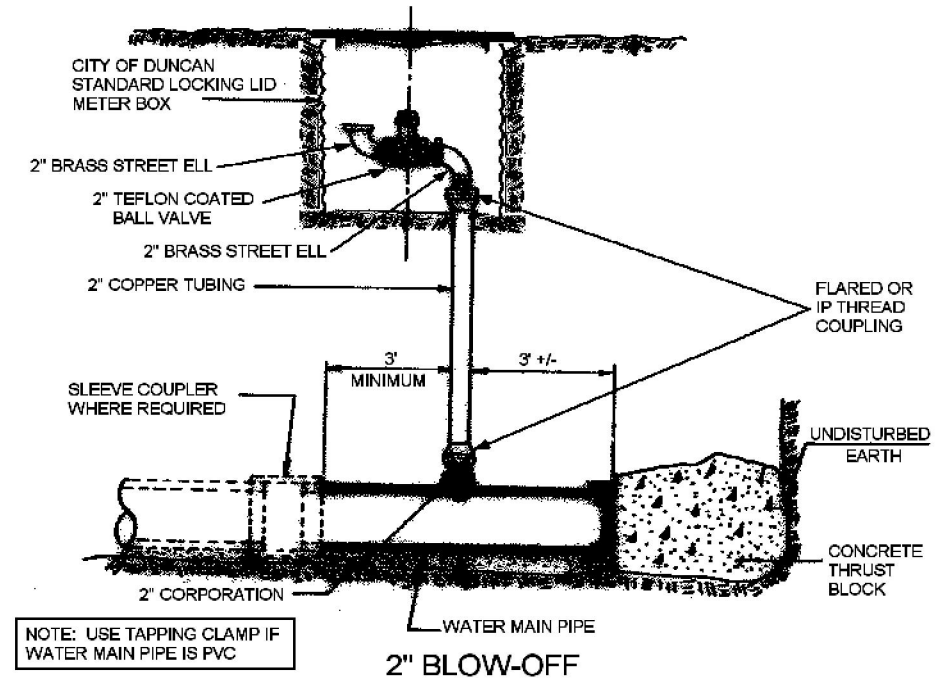

2" BLOW-OFF

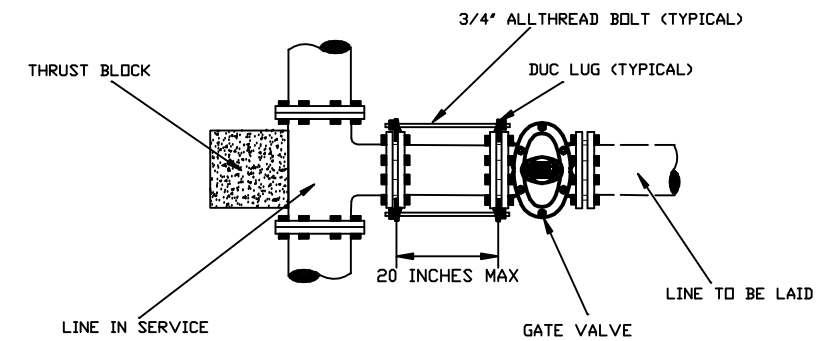

NOTE: USE NUMBER OF BOLTS W/ DUC LUGS ACCORDING TO THE SCHEDULE BELOW, EQUALLY SPACED.

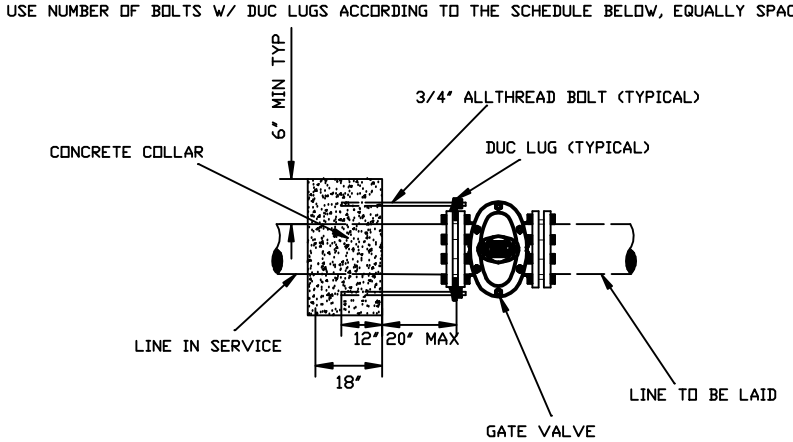

NOTE: USE NUMBER OF BOLTS W/ DUC LUGS ACCORDING TO THE SCHEDULE BELOW, EQUALLY SPACED.

PIPE SIZE	MINIMUM NUMBER OF BOLTS
6"	2
8"	3
10"	4
12"	4

TYPICAL MECHANICAL JOINT RESTRAINTS

USING 3/4-INCH ALL-THREAD BOLTS AND DUC LUGS

NOT TO SCALE

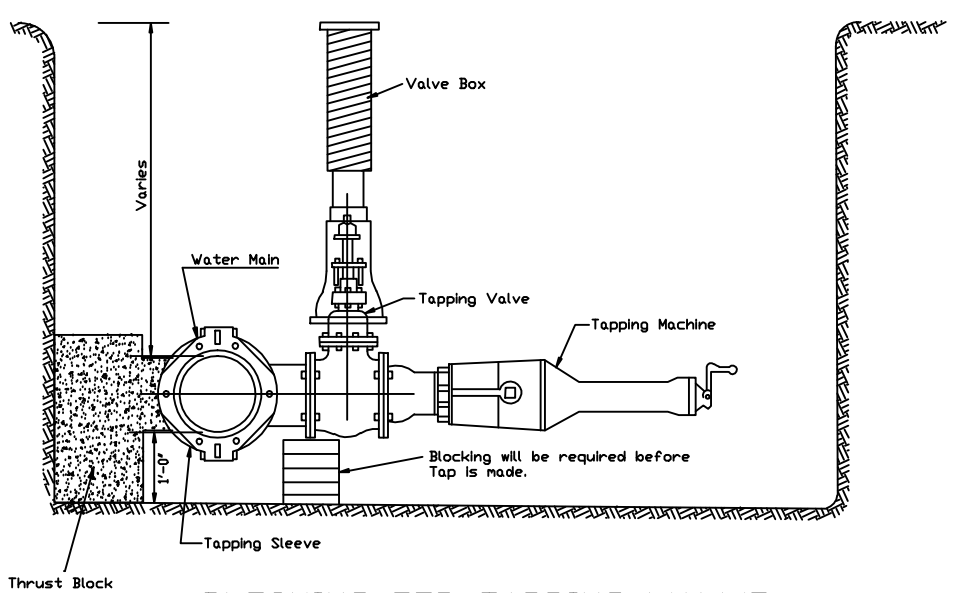

BLOCKING FOR TAPPING VALVE

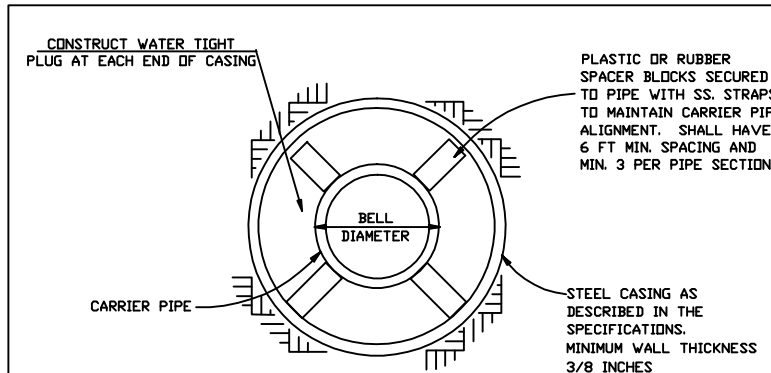

PIPE & STEEL CASING SCHEDULE	
CARRIER PIPE DIAMETER (INCHES)	MIN. CONDUIT DIAMETER (INCHES)
6	10
8	12
10	16
12	20

BORING AND CASING

Design	RSV	
Drawn	RSV	
Checked		
Approved		
Squad		

CITY OF DUNCAN

FIRE HYDRANT AND MISC. DETAILS

WM-2

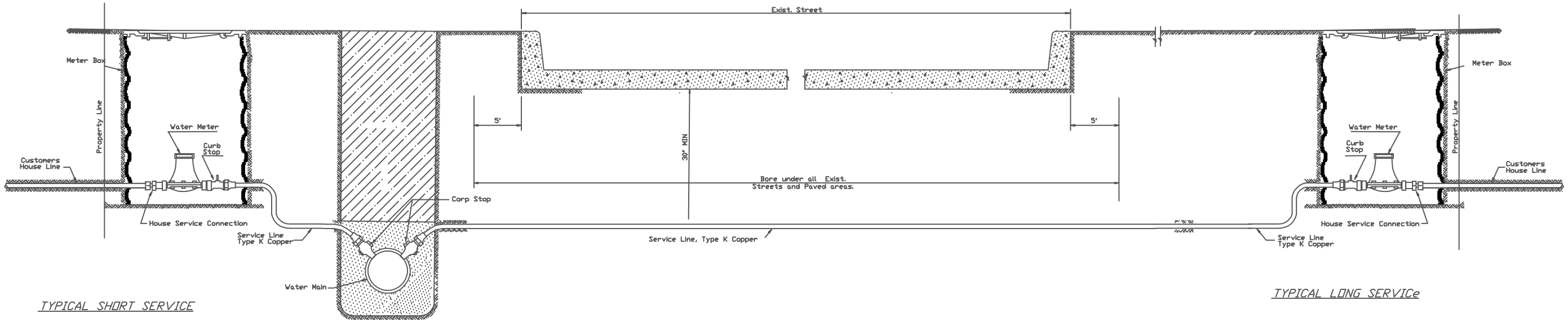

TYPICAL SHORT SERVICE

TYPICAL LONG SERVICe

TYPICAL METER AND SERVICE INSTALLATION

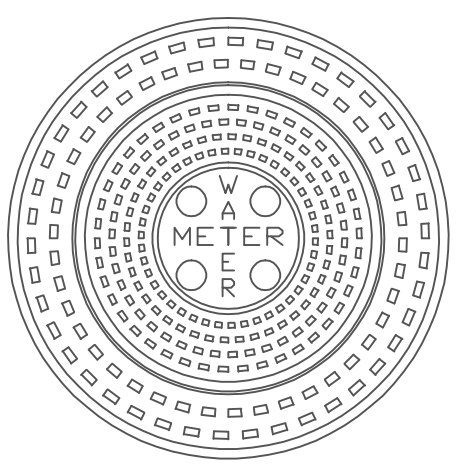

	WEIGHT
LID	19 LBS
RING	12 LBS
SET	31 LBS

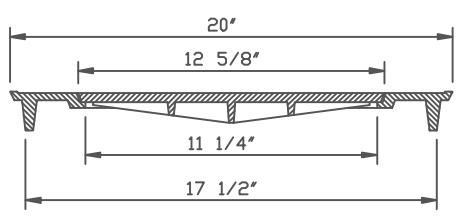

NOTE: RING AND LID TO BE CAST IRON
LID TO INCLUDE LOCKING MECHANISM

NOTE: LID TO CONTAIN 1 - 1 1/2" DIAMETER HOLE TO ACCEPT REMOTE READ METER ANTENNA TRANSMITTER

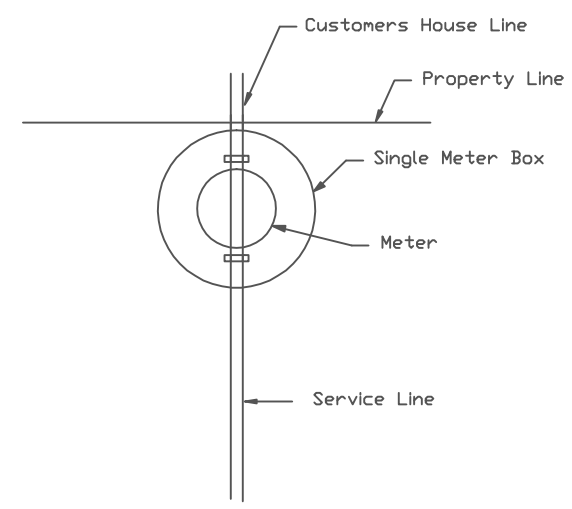

TYPICAL SINGLE METER SETTING

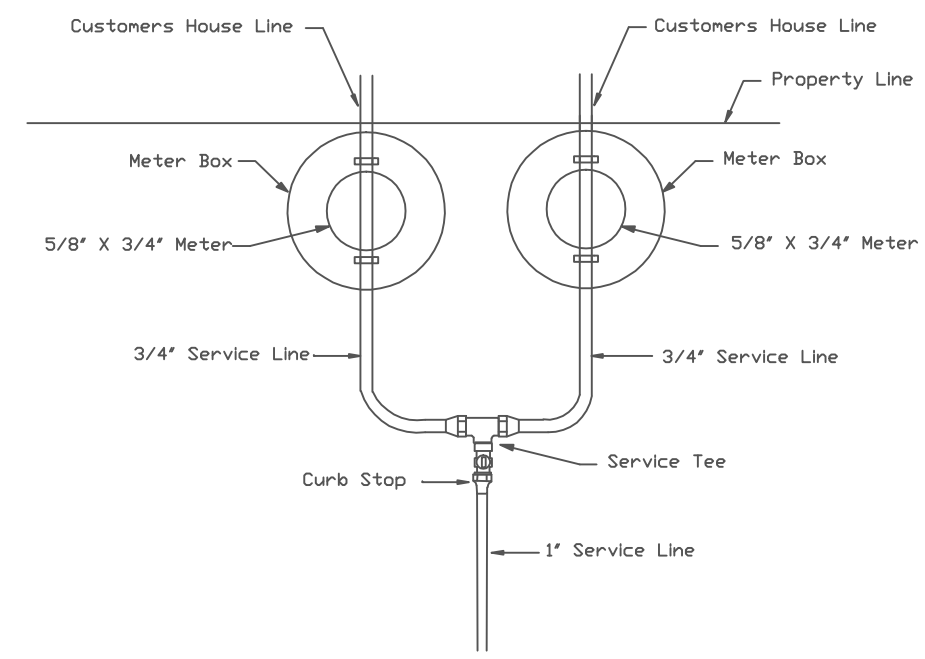

TYPICAL DOUBLE METER SETTING

ALL FITTINGS SHALL BE MUELLER OR APPROVED EQUAL
CORP STOP: MUELLER H-15000
CURB STOP: MUELLER H-15275
SERVICE TEE: MUELLER H-15386

NOTE: DOUBLE METER SETTINGS ARE ONLY PERMITTED WHEN SERVING TWO 5/8" X 3/4" METERS FROM A ONE INCH SERVICE LINE, UNLESS OTHERWISE APPROVED BY THE ENGINEER.

NOT TO SCALE

Design	RSV	
Drawn	RSV	
Checked		
Approved		
Squad		

CITY OF DUNCAN

WATER METER AND SERVICE LINE DETAILS

WM-3

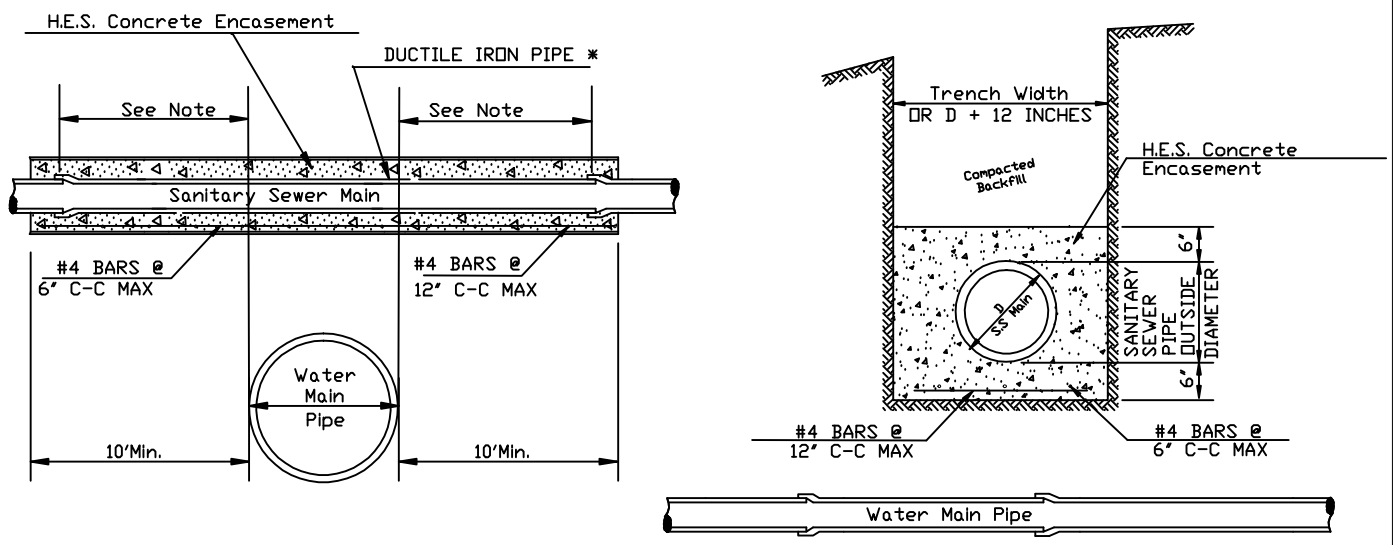

NOTE: CONCRETE ENCASEMENT IS TO EXTEND 4-INCHES PAST THE NEAREST JOINT AT OR BEYOND THE 10-FOOT MINIMUM SHOWN. REINFORCEMENT STEEL TO HAVE TWO INCHES OF CONCRETE COVER. THE ENGINEER MAY APPROVE OTHER MEANS OF STRUCTURAL SUPPORT OF THE SANITARY SEWER MAIN.

*NOTE: IF CLEARANCE BETWEEN WATER MAIN AND SS MAIN IS LESS THAN 2 FEET DUCTILE IRON PIPE TO BE CENTERED OVER WATER LINE SO THAT JOINTS ARE PLACED EQUAL DISTANCE FROM CROSSING AS SHOWN.

TYPICAL SECTIONS FOR WATER MAIN BELOW SEWER MAIN

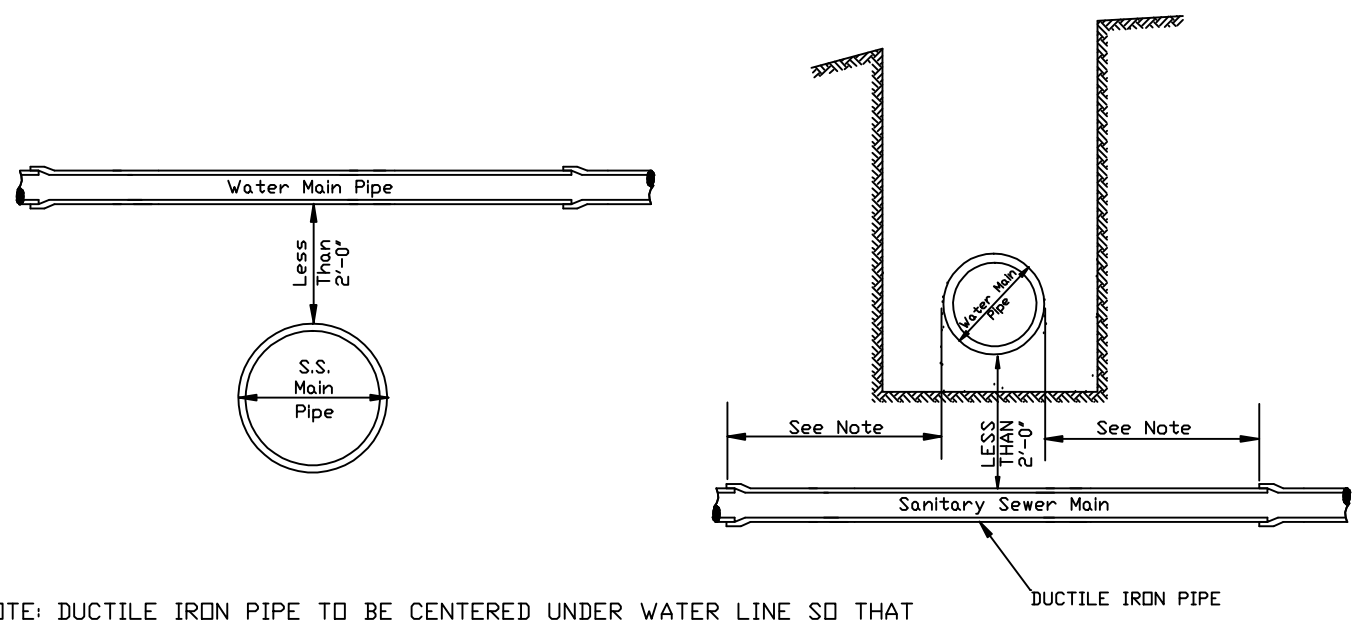

NOTE: DUCTILE IRON PIPE TO BE CENTERED UNDER WATER LINE SO THAT JOINTS ARE PLACED EQUAL DISTANCE FROM CROSSING AS SHOWN.

TYPICAL SECTIONS FOR WATER MAIN LESS THAN 2-FOOT ABOVE SEWER MAIN

WATER LINE AND SEWER CROSSINGS

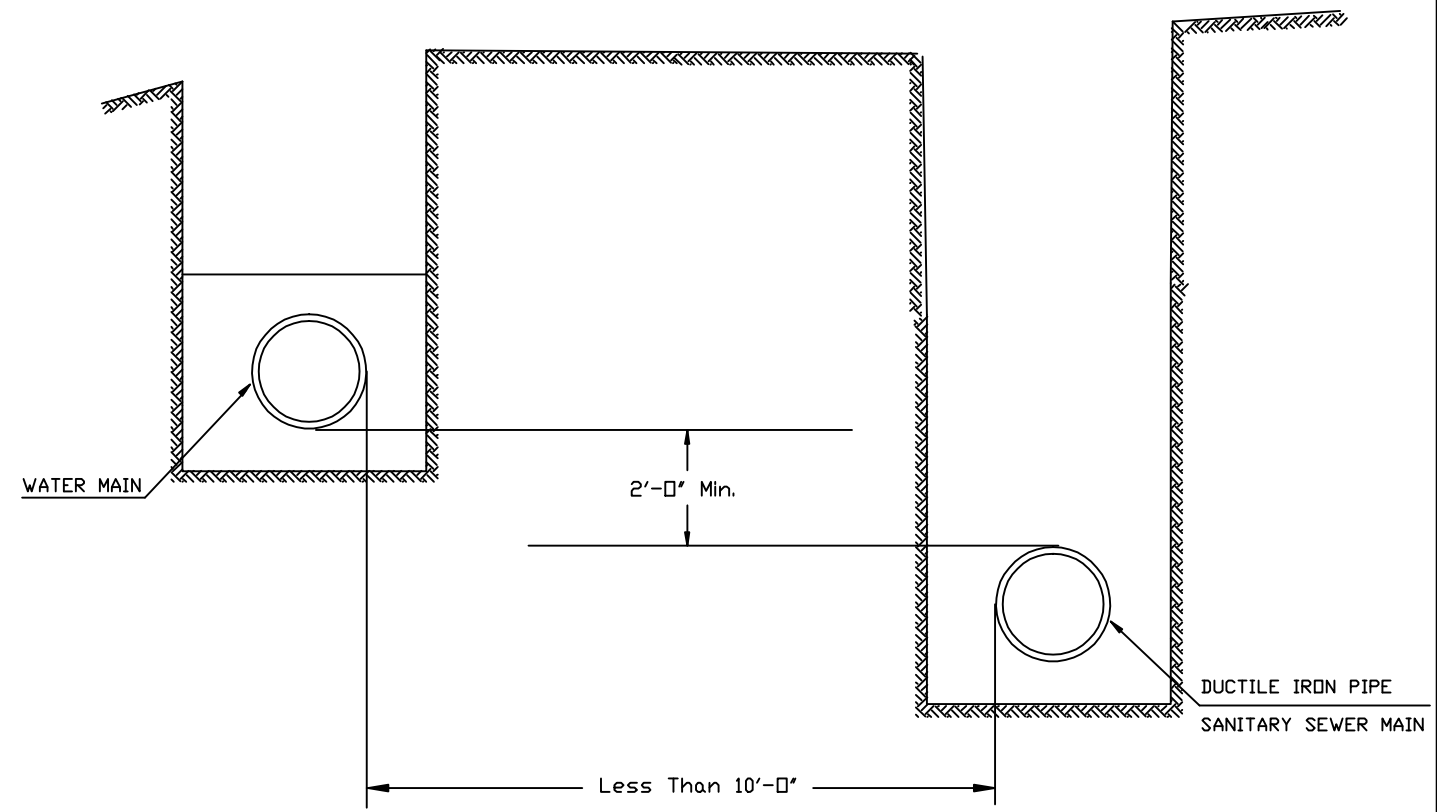

WATER AND SEWER LINES WITH HORIZONTAL CLEARANCE OF LESS THAN TEN FEET

NOT TO SCALE

Design	RSV	
Drawn	RSV	
Checked		
Approved		
Squad		

CITY OF DUNCAN

WATER & SEWER CROSSINGS
STANDARD DETAILS

WM-4

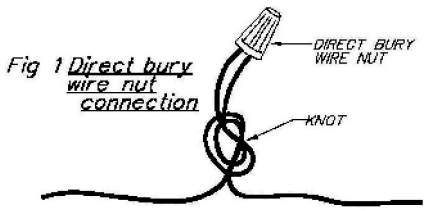

Fig 1 Direct bury wire nut connection

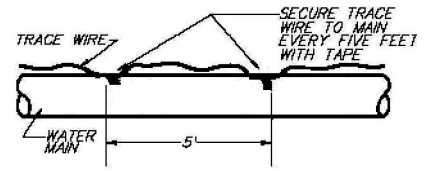

Fig 3 Trace wire installation

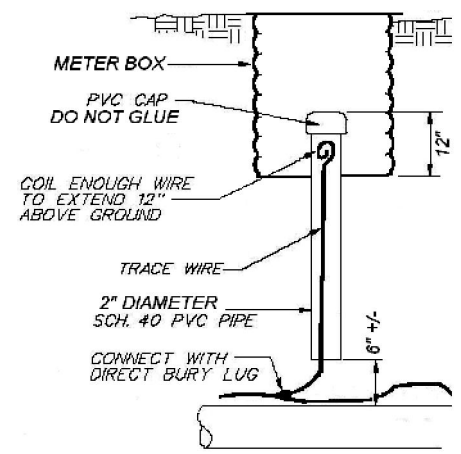

Fig 4 Trace wire access

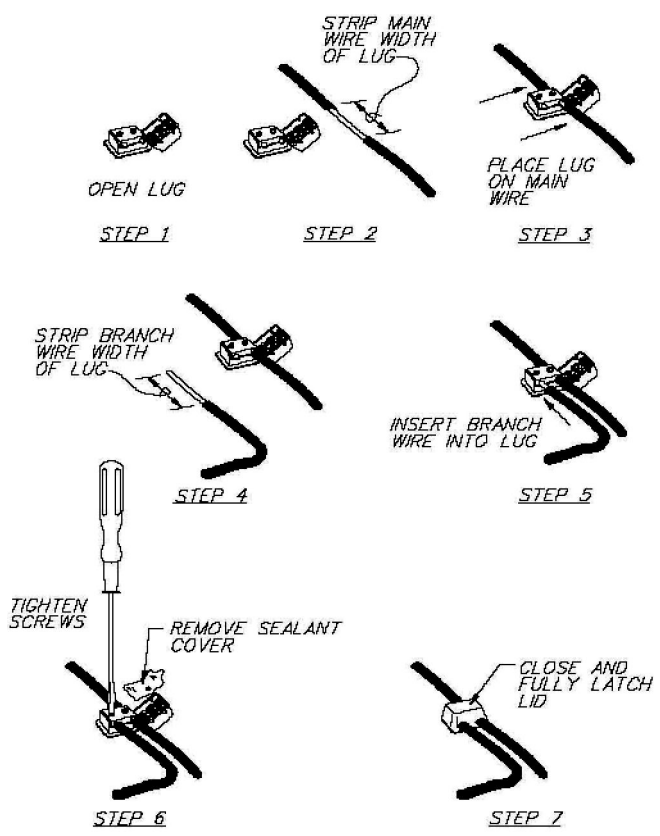

Fig 2 Direct bury lug connection

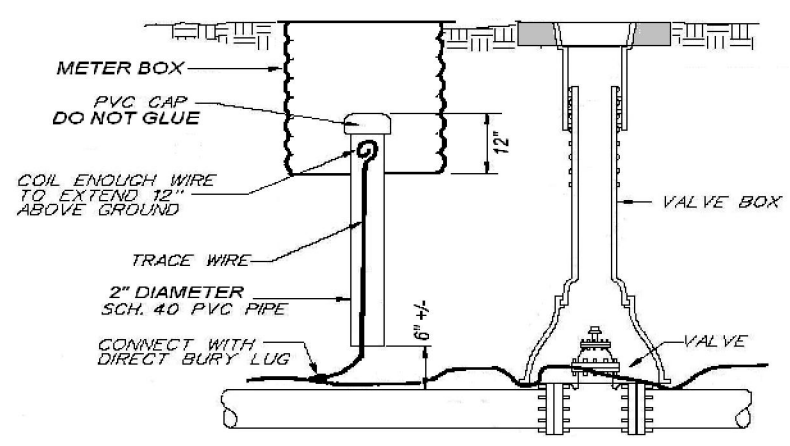

Fig 5 Trace wire access at a valve box

TRACE WIRE DETAILS

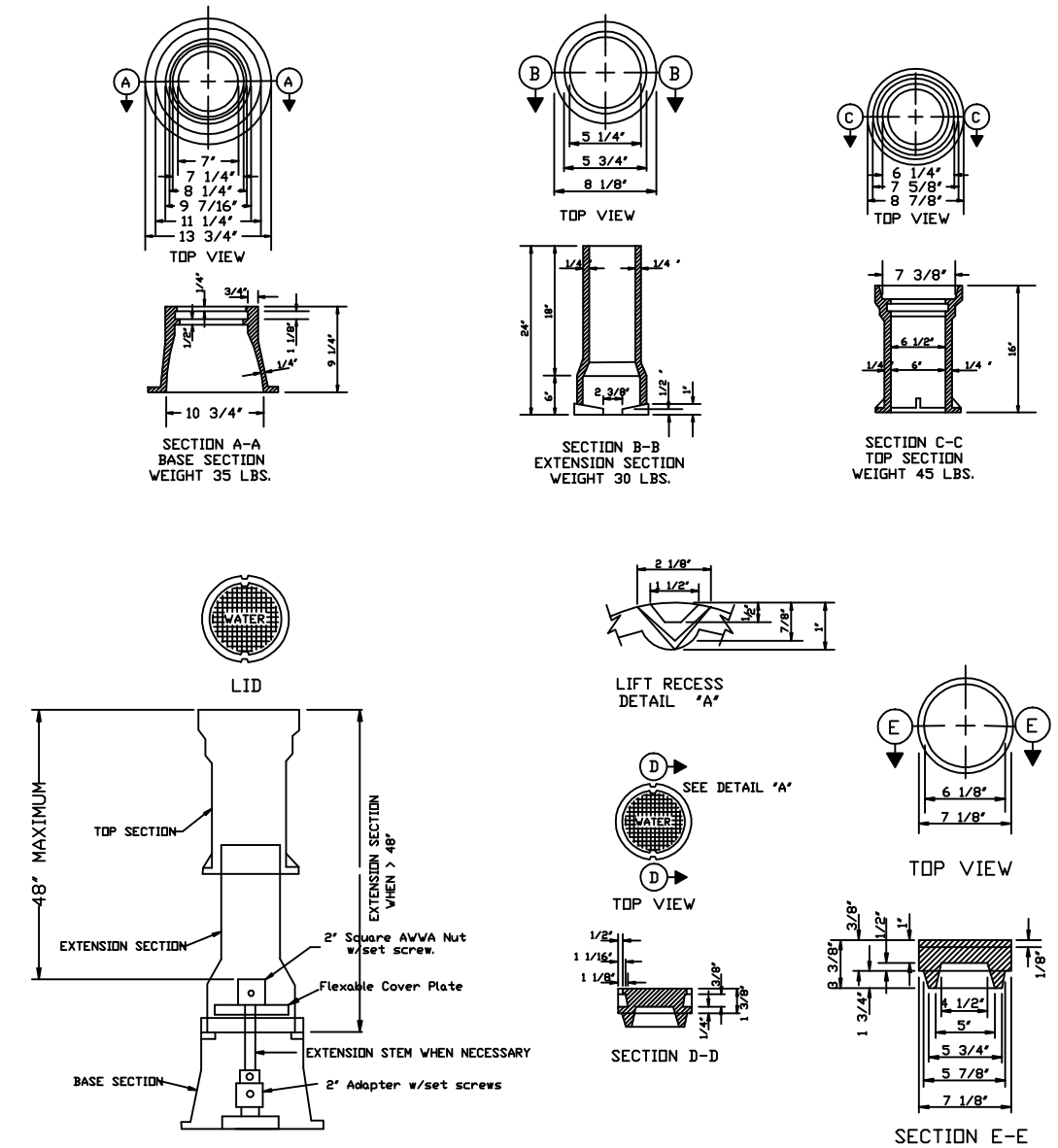

CAST IRON VALVE BOX AND LID

NOTES:

1. WATER LINE CONTRACTOR SHALL PLACE TWO FOOT (2') SQUARE CONCRETE COLLAR SIX INCHES (6") THICK AROUND EACH WATER VALVE BOX TOP AFTER FINAL GRADING HAS BEEN COMPLETED AND TRENCHES HAVE SETTLED. ALL COST OF COLLAR TO BE INCLUDED IN THE COST OF THE VALVE BOX.

2. VALVE BOXES REQUIRING OVER TWO ADDITIONAL BOTTOM SECTIONS SHALL BE EXTENDED USING CAST OR DUCTILE IRON PIPE WITH A BOTTOM AND TOP SECTION PLACED ON TOP OF THE CAST OR DUCTILE IRON PIPE.

NOT TO SCALE

Design	RSV	
Drawn	RSV	
Checked		
Approved		
Squad		

CITY OF DUNCAN

MISCELLANEOUS STANDARD DETAILS

WM-5